1/2.7-Inch 2.1 Mp/Full HD Digital Image Sensor

AR023Z Datasheet, Rev. 0

For the latest revision, please visit www.onsemi.com

Features

- Superior low-light performance
- Latest 3.0 µm pixel with ON Semiconductor DR-Pix™ technology with Dual Conversion Gain
- Full HD support at up to 1080P 60 fps for superior video performance
- Linear or high dynamic range capture
- Optional adaptive local tone mapping (ALTM)
- Pixel or Line interleaved T1/T2 output
- Support for external mechanical shutter
- On-chip phase-locked loop (PLL) oscillator
- Integrated position-based color and lens shading correction
- Slave mode for precise frame-rate control
- Stereo/3D camera support
- Statistics engine
- Data interfaces: four-lane serial high-speed pixel interface (HiSPi) differential signaling (SLVS and HiVCM), or parallel
- Auto black level calibration
- High-speed configurable context switching
- Temperature sensor

Applications

- Smart Home Automation
- Smart Lighting
- Smart Appliances
- Smart Baby Monitoring

General Description

ON Semiconductor's AR023Z is a 1/2.7-inch CMOS digital image sensor with an active-pixel array of 1928Hx1088V. It captures images in either linear or high dynamic range modes, with a rolling-shutter readout. It includes sophisticated camera functions such as in-pixel binning, windowing and both video and single frame modes. It is designed for both low light and high dynamic range scene performance. It is programmable through a simple two-wire serial interface. The AR023Z produces extraordinarily clear, sharp digital pictures, and its ability to capture both continuous video and single frames makes it the perfect choice for a wide range of applications.

Table 1: Key Parameters

Parameter		Typical Value
Optical format		1/2.7-inch (6.6 mm)
Active pixels		1928(H) x 1088(V) (16:9 mode)
Pixel size		3.0 µm x 3.0 µm
Color filter array		RGB Bayer
Shutter type		Electronic rolling shutter and GRR
Input clock range		6 – 48 MHz
Output clock maximum		148.5 Mp/s (4-lane HiSPi) 74.25 Mp/s (Parallel)
Output	Serial	HiSPi 10-, 12-, 14-, 16-, or 20-bit
	Parallel	10-, 12-bit
Frame rate	1080p	60 fps
Responsivity		4.0 V/lux-sec
SNR_{MAX}		41 dB
Max Dynamic range		Up to 105 dB
Supply voltage	I/O	1.8 or 2.8 V
	Digital	1.8 V
	Analog	2.8 V
	HiSPi	0.3 V - 0.6 V (SLVS), 1.7 V - 1.9 V (HiVcm)
Power consumption (typical)		<896 mW (HDR 1080p60, 8x gain, 25°C)
Operating temperature		–30°C to +85°C ambient
Package options		10x10 mm 80-pin iBGA

©Semiconductor Components Industries, LLC 2015,

Ordering Information

Table 2: Available Part Numbers

Part Number	Product Description	Orderable Product Attribute Description
AR023ZCSC00SUEA0-DRBR	2 Mp 1/3" CIS RGB, 0deg CRA, iBGA Package	Drypack, Anti-Reflective Glass
AR023ZCSC00SUEAD3-GEVK	RGB, 0deg CRA, Demo Kit	Demo Kit
AR023ZCSC00SUEAH3-GEVB	RGB, 0deg CRA, Headboard	Headboard
AR023ZCSC00SUEAR-GEVK	RGB, 0deg CRA	MatrixCam

See the ON Semiconductor Device Nomenclature document (TND310/D) for a full description of the naming convention used for image sensors. For reference documentation, including information on evaluation kits, please visit our web site at www.onsemi.com.

©Semiconductor Components Industries, LLC, 2015.

Table of Contents

Features 1
Applications 1
General Description 1
Ordering Information 2
General Description 6
Functional Overview 7
Pixel Data Format 13
Features Overview 15
Electrical Specifications 22
Power-On Reset and Standby Timing 31
Revision History 35

©Semiconductor Components Industries, LLC, 2015.

List of Figures

Figure 1: Block Diagram of AR023Z 7
Figure 2: Typical Configuration: Serial Four-Lane HiSPi Interface 8
Figure 3: Typical Configuration: Parallel Pixel Data Interface 9
Figure 4: 80-Ball IBGA Package 10
Figure 5: Pixel Array Description 13
Figure 6: Pixel Color Pattern Detail (Top Right Corner) 14
Figure 7: Imaging a Scene 14
Figure 8: Quantum Efficiency 21
Figure 9: Two-Wire Serial Bus Timing Parameters 22
Figure 10: I/O Timing Diagram 23
Figure 11: Power Up 31
Figure 12: Power Down 33
Figure 13: 80iBGA 10 x 10 Package Diagram 34

©Semiconductor Components Industries, LLC, 2015.

List of Tables

Table 1: Key Parameters 1
Table 2: Available Part Numbers 2
Table 3: Pin Descriptions, 80-ball iBGA 11
Table 4: List of Configurable Registers for Context A and Context B 17
Table 5: Two-Wire Serial Bus Characteristics 22
Table 6: I/O Timing Characteristics 24
Table 7: DC Electrical Characteristics 25
Table 8: Absolute Maximum Ratings 25
Table 9: 1080p30 HDR (ALTM) 74MHz Parallel 2.8V 26
Table 10: 1080p30 Linear 74MHz Parallel 2.8V 26
Table 11: 1080p30 HDR (ALTM) 74MHz Parallel 1.8V 26
Table 12: 1080p30 Linear 74 MHz Parallel 1.8V 27
Table 13: 1080p30 HDR (ALTM) 74 MHz HiSPi SLVS (Low Power Mode) 27
Table 14: 1080p30 Linear 74 MHz HiSPi SLVS 28
Table 15: 1080p30 HDR (ALTM) 74 MHz HiSPi HiVcm (Low Power Mode) 28
Table 16: 1080p30 Linear 74 MHz HiSPi HiVcm 29
Table 17: Line Interleaved HiSPi SLVS 29
Table 18: Line Interleaved HiSPi HiVcm 30
Table 19: Channel Skew 30
Table 20: Power-Up Sequence 32
Table 21: Power-Down Sequence 33

©Semiconductor Components Industries, LLC, 2015.

General Description

The ON Semiconductor AR023Z can be operated in its default mode or programmed for frame size, exposure, gain, and other parameters. The default mode output is a 1080p-resolution image at 60 frames per second (fps) through the HiSPi port. In linear mode, it outputs 12-bit or 10-bit A-Law compressed raw data, using either the parallel or serial (HiSPi) output ports. In high dynamic range mode, it outputs 12-bit compressed data using parallel output. In HiSPi mode, 12- or 14-bit compressed, or 16-bit linearized data may be output. The device may be operated in video (master) mode or in single frame trigger mode.

FRAME_VALID and LINE_VALID signals are output on dedicated pins, along with a synchronized pixel clock in parallel mode.

The AR023Z includes additional features to allow application-specific tuning: windowing and offset, auto black level correction, and on-board temperature sensor. Optional register information and histogram statistic information can be embedded in the first and last 2 lines of the image frame.

The AR023Z is designed to operate over a wide temperature range of -30°C to +85°C ambient.

©Semiconductor Components Industries, LLC, 2015.

Functional Overview

The AR023Z is a progressive-scan sensor that generates a stream of pixel data at a constant frame rate. It uses an on-chip, phase-locked loop (PLL) that can be optionally enabled to generate all internal clocks from a single master input clock running between 6 and 48 MHz. The maximum output pixel rate is 148.5 Mp/s, corresponding to a clock rate of 74.25 MHz. Figure 1 shows a block diagram of the sensor configured in linear mode, and in HDR mode.

Figure 1: Block Diagram of AR023Z

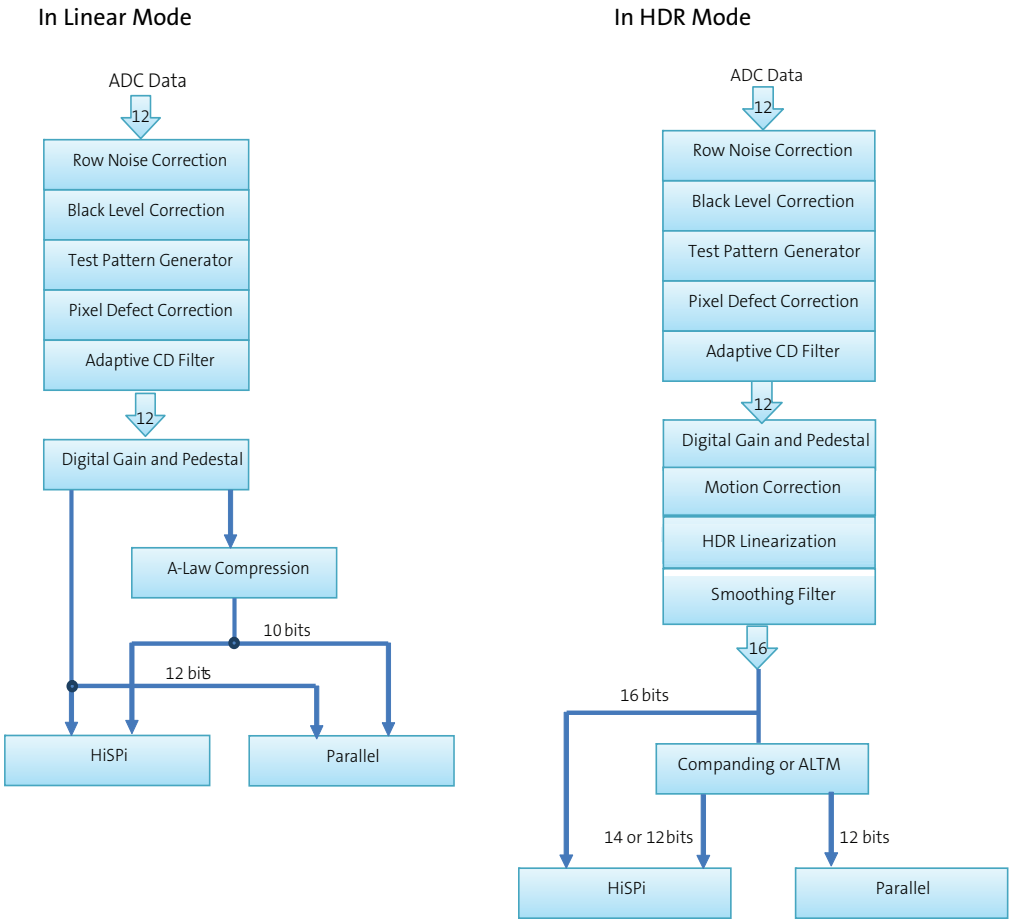

User interaction with the sensor is through the two-wire serial bus, which communicates with the array control, analog signal chain, and digital signal chain. The core of the sensor is a 2.1 Mp Active- Pixel Sensor array. The timing and control circuitry sequences through the rows of the array, resetting and then reading each row in turn. In the time interval between resetting a row and reading that row, the pixels in the row integrate incident light. The exposure is controlled by varying the time interval between reset and readout. Once a row has been read, the data from the columns is sequenced through an analog signal chain (providing offset correction and gain), and then through an analog-to-digital converter (ADC). The output from the ADC is a 12-bit value for each pixel in the array. The ADC output passes through a digital processing signal chain (which provides further data path corrections and applies digital gain). The sensor also offers a

©Semiconductor Components Industries, LLC, 2015.

high dynamic range mode of operation where multiple images are combined on-chip to produce a single image at 16-bit per pixel value. A compression mode is further offered to allow the 16 bits per pixel to be transmitted to the host system as a 12-bit value with close to zero loss in image quality.

Figure 2: Typical Configuration: Serial Four-Lane HiSPi Interface

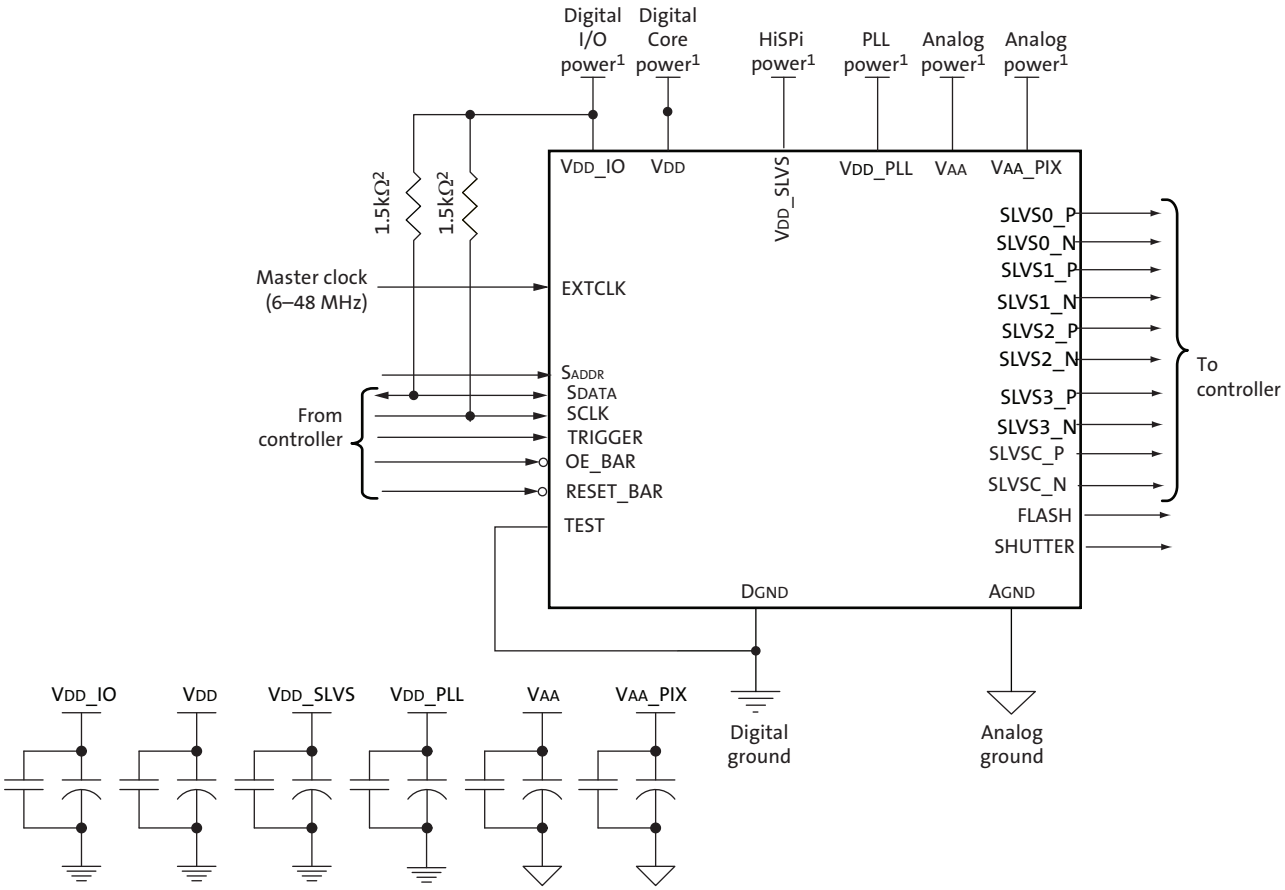

Notes:
1. All power supplies must be adequately decoupled.
2. ON Semiconductor recommends a resistor value of 1.5kΩ, but a greater value may be used for slower two-wire speed.
3. The parallel interface output pads can be left unconnected if the serial output interface is used.
4. ON Semiconductor recommends that 0.1µF and 10µF decoupling capacitors for each power supply are mounted as close as possible to the pad. Actual values and results may vary depending on lay-out and design considerations. Refer to the AR023Z demo headboard schematics for circuit recommendations.
5. ON Semiconductor recommends that analog power planes are placed in a manner such that coupling with the digital power planes is minimized.
6. I/O signals voltage must be configured to match VDD_IO voltage to minimize any leakage currents.

©Semiconductor Components Industries, LLC, 2015.

Figure 3: Typical Configuration: Parallel Pixel Data Interface

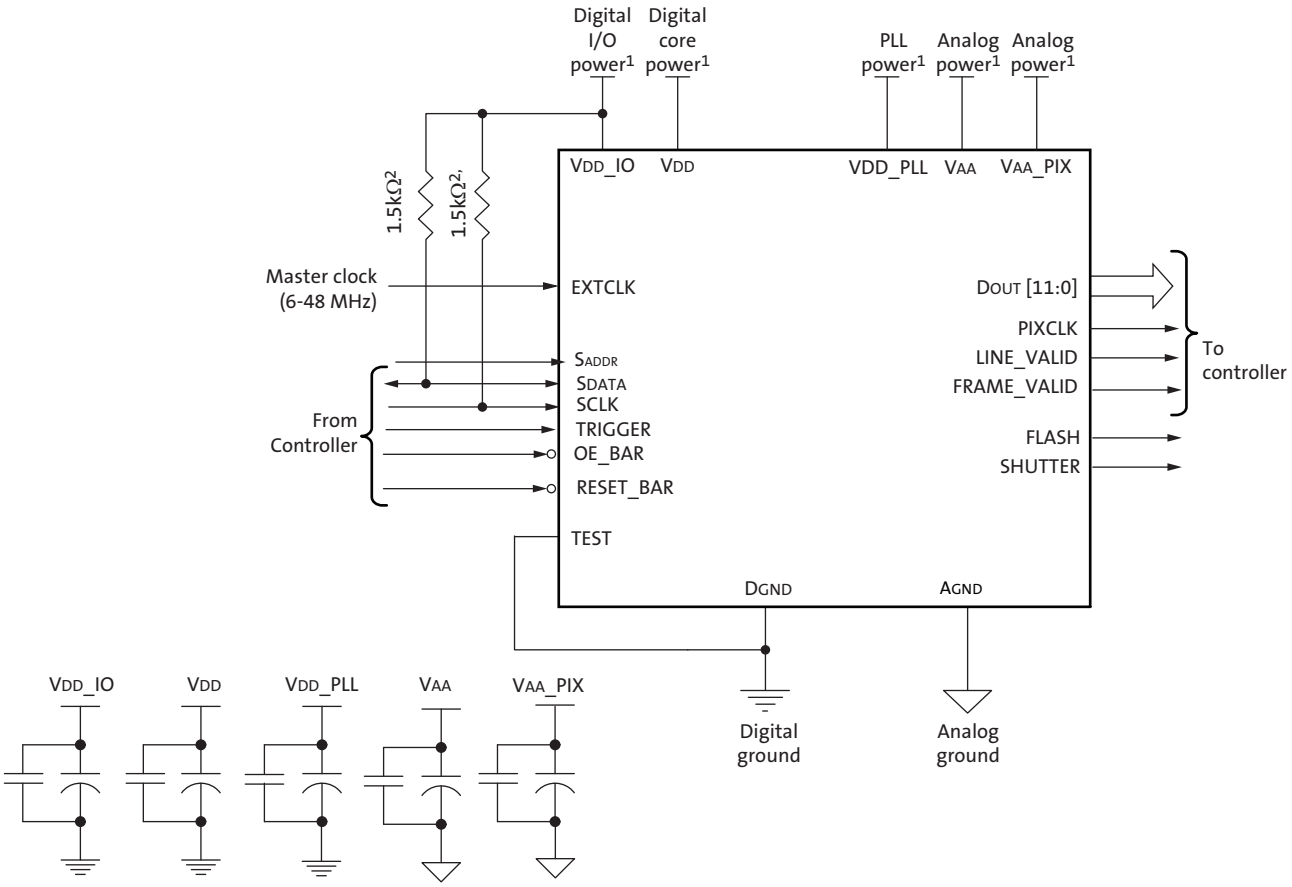

Notes:
1. All power supplies must be adequately decoupled.
2. ON Semiconductor recommends a resistor value of 1.5kΩ, but a greater value may be used for slower two-wire speed.
3. The serial interface output pads and VDDSLVS can be left unconnected if the parallel output interface is used.
4. ON Semiconductor recommends that 0.1µF and 10µF decoupling capacitors for each power supply are mounted as close as possible to the pad. Actual values and results may vary depending on layout and design considerations. Refer to the AR023Z demo headboard schematics for circuit recommendations.
5. ON Semiconductor recommends that analog power planes are placed in a manner such that coupling with the digital power planes is minimized.
6. I/O signals voltage must be configured to match VDD_IO voltage to minimize any leakage currents.
7. The EXTCLK input is limited to 6-48 MHz.

©Semiconductor Components Industries, LLC, 2015.

Figure 4: 80-Ball IBGA Package

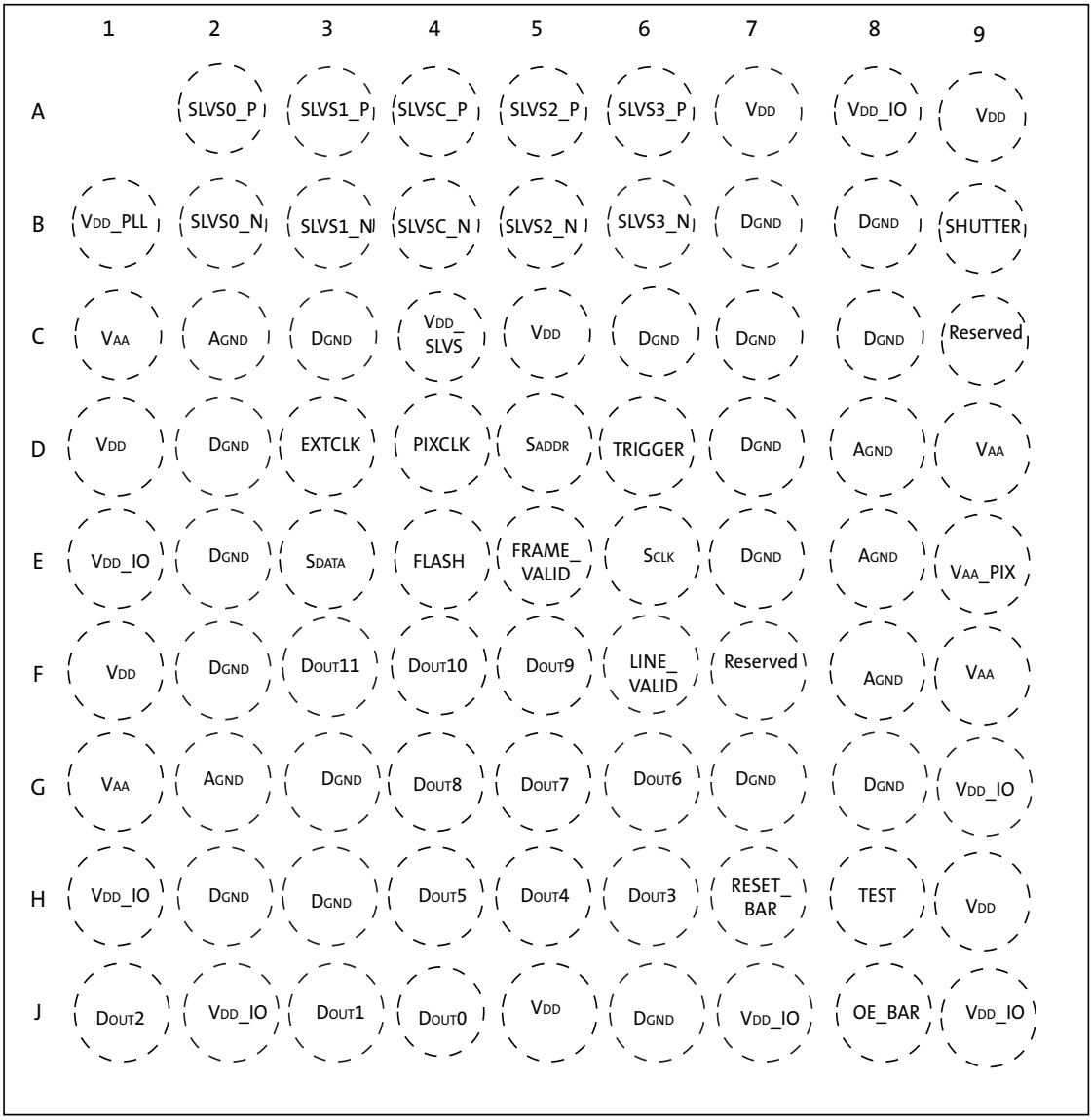

Top View
(Ball Down)

©Semiconductor Components Industries, LLC, 2015.

Table 3: Pin Descriptions, 80-ball iBGA

Name	iBGA Pin	Type	Description
SLVS0_P	A2	Output	HiSPi serial data, lane 0, differential P.
SLVS1_P	A3	Output	HiSPi serial data, lane 1, differential P.
SLVSC_P	A4	Output	HiSPi serial DDR clock differential P.
SLVS2_P	A5	Output	HiSPi serial data, lane 2, differential P.
SLVS3_P	A6	Output	HiSPi serial data, lane 3, differential P.
VDD_PLL	B1	Power	PLL power.
SLVS0_N	B2	Output	HiSPi serial data, lane 0, differential N.
SLVS1_N	B3	Output	HiSPi serial data, lane 1, differential N.
SLVSC_N	B4	Output	HiSPi serial DDR clock differential N.
SLVS2_N	B5	Output	HiSPi serial data, lane 2, differential N.
SLVS3_N	B6	Output	HiSPi serial data, lane 3, differential N.
SHUTTER	B9	Output	Control for external mechanical shutter. Can be left floating if not used.
VAA	C1, G1, D9, F9	Power	Analog power.
AGND	C2, G2, D8, E8, F8	Power	Analog ground.
VDD_SLVS	C4	Power	0.3V-0.6V or 1.7V - 1.9V port to HiSPi Output Driver. Set the High_VCM (R0x306E[9]) bit to 1 when configuring VDD_SLVS to 1.7 – 1.9V.
VDD	C5, J5, A9, H9, A7, D1, F1	Power	Digital power.
Reserved	C9, F7		
DGND	B7, C7, D7, E7, G7, B8, C8, G8, D2, E2, F2, H2, C3, G3, H3, C6, J6	Power	Digital ground.
EXTCLK	D3	Input	External input clock.
PIXCLK	D4	Output	Pixel clock out. Dout is valid on rising edge of this clock.
SADDR	D5	Input	Two-Wire Serial address select. 0: 0x20. 1: 0x30
TRIGGER	D6	Input	Exposure synchronization input.
VAA_PIX	E9	Power	Pixel power.
VDD_IO	E1, H1, J2, J7, A8, G9, J9	Power	I/O supply power.
SDATA	E3	I/O	Two-Wire Serial data I/O.
FLASH	E4	Output	Flash control output.
FRAME_VALID	E5	Output	Asserted when Dout frame data is valid.
SCLK	E6	Input	Two-Wire Serial clock input.
DOUT11	F3	Output	Parallel pixel data output (MSB)
DOUT10	F4	Output	Parallel pixel data output.
DOUT9	F5	Output	Parallel pixel data output.
LINE_VALID	F6	Output	Asserted when Dout line data is valid.
DOUT8	G4	Output	Parallel pixel data output.
DOUT7	G5	Output	Parallel pixel data output.
DOUT6	G6	Output	Parallel pixel data output.
DOUT5	H4	Output	Parallel pixel data output.
DOUT4	H5	Output	Parallel pixel data output.
DOUT3	H6	Output	Parallel pixel data output.
RESET_BAR	H7	Input	Asynchronous reset (active LOW). All settings are restored to factory default.

©Semiconductor Components Industries, LLC, 2015.

Table 3: Pin Descriptions, 80-ball iBGA

Name	iBGA Pin	Type	Description
TEST	H8	Input.	Manufacturing test enable pin (connect to Dgnd).
DOUT2	J1	Output	Parallel pixel data output.
DOUT1	J3	Output	Parallel pixel data output.
DOUT0	J4	Output	Parallel pixel data output (LSB)
OE_BAR	J8	Input	Output enable (active LOW).

©Semiconductor Components Industries, LLC, 2015.

Pixel Data Format

Pixel Array Structure

While the sensor's format is 1928 x1088, additional active columns and active rows are included for use when horizontal or vertical mirrored readout is enabled, to allow readout to start on the same pixel. The pixel adjustment is always performed for mono-chrome or color versions. The active area is surrounded with optically transparent dummy pixels to improve image uniformity within the active area. Not all dummy pixels or barrier pixels can be read out.

Figure 5: Pixel Array Description

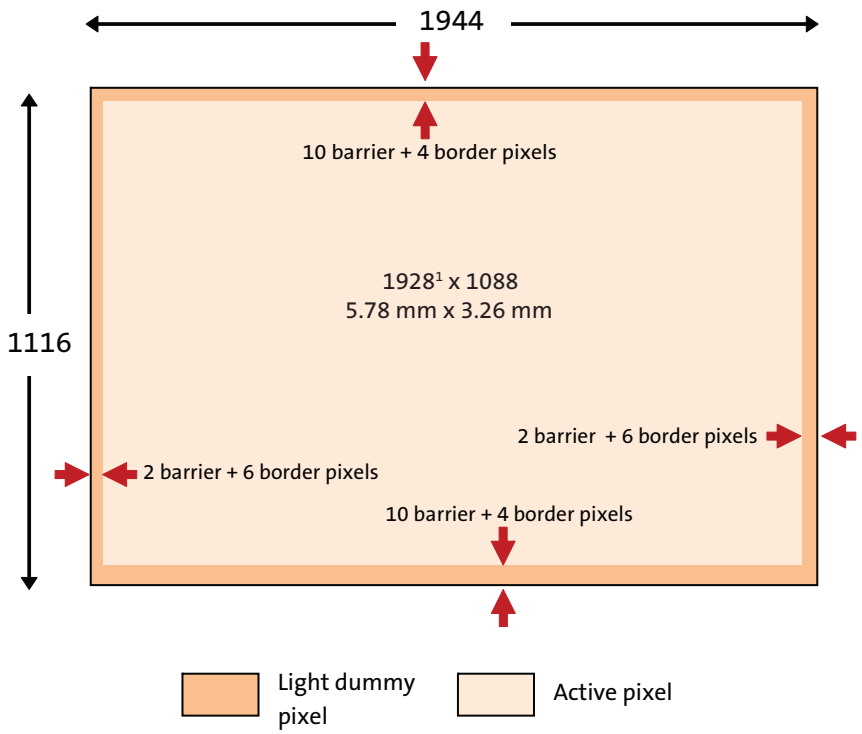

©Semiconductor Components Industries, LLC, 2015.

Figure 6: Pixel Color Pattern Detail (Top Right Corner)

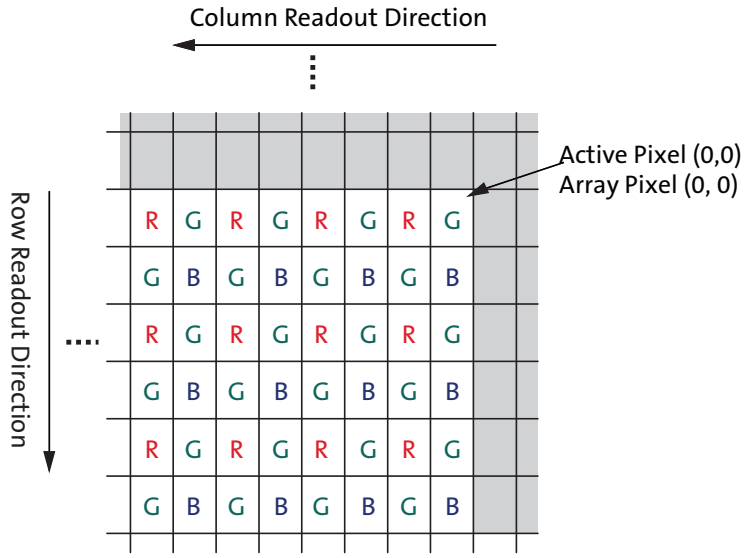

Default Readout Order

By convention, the sensor core pixel array is shown with pixel (0,0) in the top right corner (see Figure 6). This reflects the actual layout of the array on the die. Also, the first pixel data read out of the sensor in default condition is that of pixel (10, 14).

When the sensor is imaging, the active surface of the sensor faces the scene as shown in Figure 7. When the image is read out of the sensor, it is read one row at a time, with the rows and columns sequenced as shown in Figure 7.

Figure 7: Imaging a Scene

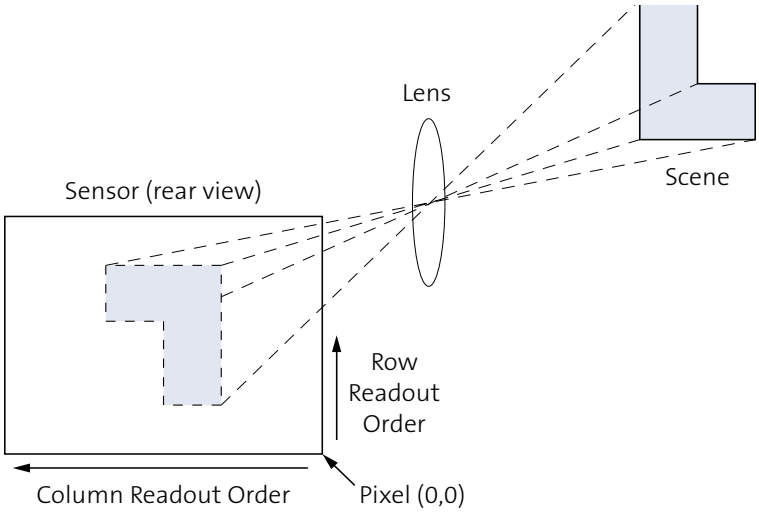

©Semiconductor Components Industries, LLC, 2015.

Features Overview

For a complete description, recommendations, and usage guidelines for product features, refer to the AR023Z Developer Guide.

3.0μm Dual Conversion Gain Pixel

To improve the low light performance and keep the high dynamic range, a large (3.0um) dual conversion gain pixel is implemented for better image optimization. With a dual conversion gain pixel, the conversion gain of the pixel may be dynamically changed to better adapt the pixel response based on dynamic range of the scene. This gain can be switched manually or automatically by an auto exposure control module.

HDR

By default, the sensor powers up in HDR Mode. The HDR scheme used is multi-exposure HDR. This allows the sensor to handle up to 105 dB of dynamic range. In HDR mode, the sensor sequentially captures two exposures by maintaining two separate read and reset pointers that are interleaved within the rolling shutter readout. The intermediate pixel values are stored in line buffers while waiting for the two exposure values to be present. As soon as a pixel's two exposure values are available, they are combined to create a linearized 16-bit value for each pixel's response. The exposure ratio may be set to 4x, 8x, 16x, or 32x. Depending on whether HiSPi or Parallel mode is selected, the full 16 bit value may be output, it can be compressed to 12 bits using Adaptive Local Tone Mapping (ALTM), or companded to 12 or 14 bits.

Options to output T1 only, T2 only, or pixel interleaved data are also available. Individual exposures may be read out in a line interleaved mode as described in the T1/T2 Line Interleaved Mode section.

Resolution

The active array supports a maximum of 1928x1088 pixels to support 1080p resolution. Utilizing a 3.0um pixel will result in an optical format of 1/2.7-inch (approximately 6.6mm diagonal).

Frame Rate

At full (1080p) resolution, the AR023Z is capable of running up to 3060 fps.

Image Acquisition Mode

The AR023Z supports two image acquisition modes:

- Electronic rolling shutter (ERS) mode

This is the normal mode of operation. When the AR023Z is streaming, it generates frames at a fixed rate, and each frame is integrated (exposed) using the ERS. When ERS mode is in use, timing and control logic within the sensor sequences through the rows of the array, resetting and then reading each row in turn. In the time interval between resetting a row and subsequently reading that row, the pixels in the row integrate incident light. The integration (exposure) time is controlled by varying the time between row reset and row readout. For each row in a frame, the time between row reset and row readout is the same, leading to a uniform integration time across the frame. When the integration time is changed (by using the two-wire serial interface to change register settings), the timing and control logic controls the transition from old to new integration

©Semiconductor Components Industries, LLC, 2015.

time in such a way that the stream of output frames from the AR023Z switches cleanly from the old integration time to the new while only generating frames with uniform integration. See “Changes to Integration Time” in the AR023Z Register Reference.

- Global reset mode.

This mode can be used to acquire a single image at the current resolution. In this mode, the end point of the pixel integration time is controlled by an external electromechanical shutter, and the AR023Z provides control signals to interface to that shutter. The benefit of using an external electromechanical shutter is that it eliminates the visual artifacts associated with ERS operation. Visual artifacts arise in ERS operation, particularly at low frame rates, because an ERS image effectively integrates each row of the pixel array at a different point in time.

Embedded Data and Statistics

The AR023Z has the capability to output image data and statistics embedded within the frame timing. There are two types of information embedded within the frame readout.

- Embedded Data:
  If enabled, these are displayed on the two rows immediately before the first active pixel row is displayed.

- Embedded Statistics:
  If enabled, these are displayed on the two rows immediately after the last active pixel row is displayed.

Multi-Camera Synchronization

The AR023Z supports advanced line synchronization controls for multi-camera (stereo) support.

Slave Mode

The slave mode feature of the AR023Z supports triggering the start of a frame readout from an input signal that is supplied from an external ASIC. The slave mode signal allows for precise control of frame rate and register change updates.

Context Switching and Register Updates

The user has the option of using the highly configurable context memory, or a simplified implementation in which only a subset of registers is available for switching. The AR023Z supports a highly configurable context switching RAM of size 256 x 16. Within this Context Memory, changes to any register may be stored. The register set for each context must be the same, but the number of contexts and registers per context are limited only by the size of the context memory.

Alternatively, the user may switch between two predefined register sets A and B by writing to a context switch change bit. When the context switch is configured to context A the sensor will reference the context A registers. If the context switch is changed from A to B during the readout of frame n, the sensor will then reference the context B coarse_integration_time registers in frame n+1 and all other context B registers at the beginning of reading frame n+2. The sensor will show the same behavior when changing from context B to context A. The registers listed in Table 4 are context-switchable:

©Semiconductor Components Industries, LLC, 2015.

Table 4: List of Configurable Registers for Context A and Context B

Context A	Context B
Register Description	**Register Description**
coarse_integration_time	coarse_integration_time_cb
line_length_pck	line_length_pck_cb
frame_length_lines	frame_length_lines_cb
row_bin	row_bin_cb
col_bin	col_bin_cb
fine_gain	fine_gain_cb
coarse_gain	coarse_gain_cb
x_addr_start	x_addr_start_cb
y_addr_start	y_addr_start_cb
x_addr_end	x_addr_end_cb
y_addr_end	y_addr_end_cb
y_odd_inc	y_odd_inc_cb
x_odd_inc	x_odd_inc_cb
green1_gain	green1_gain_cb
blue_gain	blue_gain_cb
red_gain	red_gain_cb
green2_gain	green2_gain_cb
global_gain	global_gain_cb
operation_mode_ctrl	operation_mode_ctrl_cb
bypass_pix_comb	bypass_pix_comb_cb

Motion Compensation/DLO

In typical multi-exposure HDR systems, motion artifacts can be created when objects move during the T1 or T2 integration time. When this happens, edge artifacts can potentially be visible and might look like a ghosting effect. To correct this, the AR023Z has special 2D motion compensation circuitry that detects motion artifacts and corrects the image. The motion compensation feature can be optionally enabled by register write. Additional parameters are available to control the extent of motion detection and correction as per the requirements of the specific application.

Tone Mapping

Real-world scenes often have a very high dynamic range (HDR) that far exceeds the electrical dynamic range of the imager. Dynamic range is defined as the luminance ratio between the brightest and the darkest objects in a scene. Even though the AR023Z can capture full dynamic range images, the images are still limited by the low dynamic range of display devices. Today's typical LCD monitor has a contrast ratio around 1,000:1 while it is not atypical for an HDR image having a contrast ratio of around 250,000:1. Therefore, in order to reproduce HDR images on a low dynamic range display device, the captured high dynamic range must be compressed to the available range of the display device. This is commonly called tone mapping. The AR023Z has implemented an adaptive local tone mapping (ALTM) feature to reproduce visually appealing images that increase the local contrast and the visibility of the images.

©Semiconductor Components Industries, LLC, 2015.

Adaptive Color Difference (ADACD) Noise Filtering

A good noise reduction filter will remove noise from an image while retaining as much image detail as possible. To retain image detail, the noise reduction filter must adapt to the image signal. To remove noise, the noise reduction filter must adapt to the noise level of the image signal. The key is to remove the appropriate amount of noise. Over-filtering will cause image blurring while under-filtering will leave noise in the image. The AdaCD algorithm relies on a noise model derived from characterization data to aid in separating noise from signal.

The AR023Z AdaCD algorithm performs pixel-by-pixel color noise correction for each of the red, blue, and green color planes. Each pixel is corrected based on surrounding pixel values on the same color plane and a noise model. The noise model is based on characterization data, and takes into account applied analog gain.

Fast Mode Switch (Combi Mode)

To facilitate faster switching between linear and HDR modes, the AR023Z includes a Combi Mode feature. When enabled, Combi Mode loads a single (HDR) sequencer. When switching from HDR to linear modes, the sequencer remains the same, but only the T1 image is output. While not optimized for linear mode operation, it allows faster mode switching as a new sequencer load is not needed. Switching between modes may result in the output of one bad frame.

Analog/Digital Gains

A programmable analog gain of 1.5x to 12x (HDR) and 1.5x to 16x (linear) applied simultaneously to all color channels will be featured along with a digital gain of 1x to 16x that may be configured on a per color channel basis.

Skipping/Binning Modes

The AR023Z supports subsampling. Subsampling allows the sensor to read out a smaller set of active pixels by either skipping, binning, or summing pixels within the readout window. Horizontal binning is achieved in the digital readout. The sensor will sample the combined 2x adjacent pixels within the same color plane. Vertical row binning is applied in the pixel readout. Row binning can be configured as 2x rows within the same color plane. Pixel skipping can be configured up to 2x in both the x-direction and y-direction. Skipping pixels in the x-direction will not reduce the row time. Skipping pixels in the y direction will reduce the number of rows from the sensor effectively reducing the frame time. Skipping will introduce image artifacts from aliasing.

The AR023Z supports row wise vertical binning. Row wise vertical summing is not supported.

Clocking Options

The sensor contains a phase-locked loop (PLL) that is used for timing generation and control. The required VCO clock frequency is attained through the use of a pre-PLL clock divider followed by a multiplier. The PLL multiplier should be an even integer. If an odd integer (M) is programmed, the PLL will default to the lower (M-1) value to maintain an even multiplier value. The multiplier is followed by a set of dividers used to generate the output clocks required for the sensor array, the pixel analog and digital readout paths, and the output parallel and serial interfaces. Use of the PLL is required when using the HiSPi interface.

©Semiconductor Components Industries, LLC, 2015.

Temperature Sensor

The AR023Z sensor has a built-in PTAT-based temperature sensor, accessible through registers, that is capable of measuring die junction temperature. The value read out from the temperature sensor register is an ADC output value that needs to be converted downstream to a final temperature value in degrees Celsius. Since the PTAT device characteristic response is quite linear in the temperature range of operation required, a simple linear function can be used to convert the ADC output value to the final temperature in degrees Celsius.

A single reference point will be made available via register read as well as a slope for back-calculating the junction temperature value. An error of +/-5% or better over the full specified operating range of the sensor is to be expected.

Silicon / Firmware / Sequencer Revision Information

A revision register will be provided to read out (via I^2C) silicon and sequencer/OTPM revision information. This will be helpful to distinguish among different lots of material if there are future OTPM or sequencer revisions.

Lens Shading Correction

The latest lens shading correction algorithm will be included for potential low Z height applications.

Companding

The 16-bit linearized HDR image may be compressed to 12- or 14- bits using on-chip companding. This is useful if on-chip ALTM will not be used and the ISP cannot handle 16 bit data.

Compression

When the AR023Z is configured for linear mode operation, the sensor can optionally compress 12-bit data to 10-bit using A-law compression. The A-law compression is disabled by default.

Packaging

The AR023Z will be offered in a 10x10 80-iBGA package (parallel and HiSPi). The package will have anti-reflective coating on both sides of the cover glass.

Parallel Interface

The parallel pixel data interface uses these output-only signals:

- FRAME_VALID
- LINE_VALID
- PIXCLK
- DOUT[11:0]

The parallel pixel data interface is disabled by default at power up and after reset. It can be enabled by programming R0x301A. When the parallel pixel data interface is in use, the serial data output signals can be left unconnected.

©Semiconductor Components Industries, LLC, 2015.

High Speed Serial Pixel (HiSPi) Interface

The HiSPi interface supports three protocols, Streaming-S, Streaming-SP, and Packetized SP. The streaming protocols conform to a standard video application where each line of active or intra-frame blanking provided by the sensor is transmitted at the same length. The Packetized SP protocol will transmit only the active data ignoring line-to-line and frame-to-frame blanking data.

The HiSPi interface building block is a unidirectional differential serial interface with four data and one double data rate (DDR) clock lanes. One clock for every four serial data lanes is provided for phase alignment across multiple lanes. The AR023Z supports serial data widths of 10, 12, 14, 16, or 20 bits on one, two, or four lanes. The specification includes a DLL to compensate for differences in group delay for each data lane. The DLL is connected to the clock lane and each data lane, which acts as a control master for the output delay buffers. Once the DLL has gained phase lock, each lane can be delayed in 1/8 unit interval (UI) steps. This additional delay allows the user to increase the setup or hold time at the receiver circuits and can be used to compensate for skew introduced in PCB design. Delay compensation may be set for clock and/or data lines in the hispi_timing register R0x31C0. If the DLL timing adjustment is not required, the data and clock lane delay settings should be set to a default code of 0x0000 to reduce jitter, skew, and power dissipation.

Sensor Control Interface

The two-wire serial interface bus enables read/write access to control and status registers within the AR023Z. The interface protocol uses a master/slave model in which a master controls one or more slave devices. The sensor acts as a slave device. The master generates a clock (SCLK) that is an input to the sensor and is used to synchronize transfers.

Data is transferred between the master and the slave on a bidirectional signal (SDATA). SDATA is pulled up to VDD_IO off-chip by a 1.5kΩ resistor. Either the slave or master device can drive SDATA LOW-the interface protocol determines which device is allowed to drive SDATA at any given time. The two-wire serial interface can run at 100 kHz or 400 kHz.

T1/T2 Line Interleaved Mode

The AR023Z has the capability to output the T1 and T2 exposures separately, in a line interleaved format. The purpose of this is to enable off chip HDR linear combination and processing. See the AR023Z Developer Guide for more information.

©Semiconductor Components Industries, LLC, 2015.

Figure 8: Quantum Efficiency

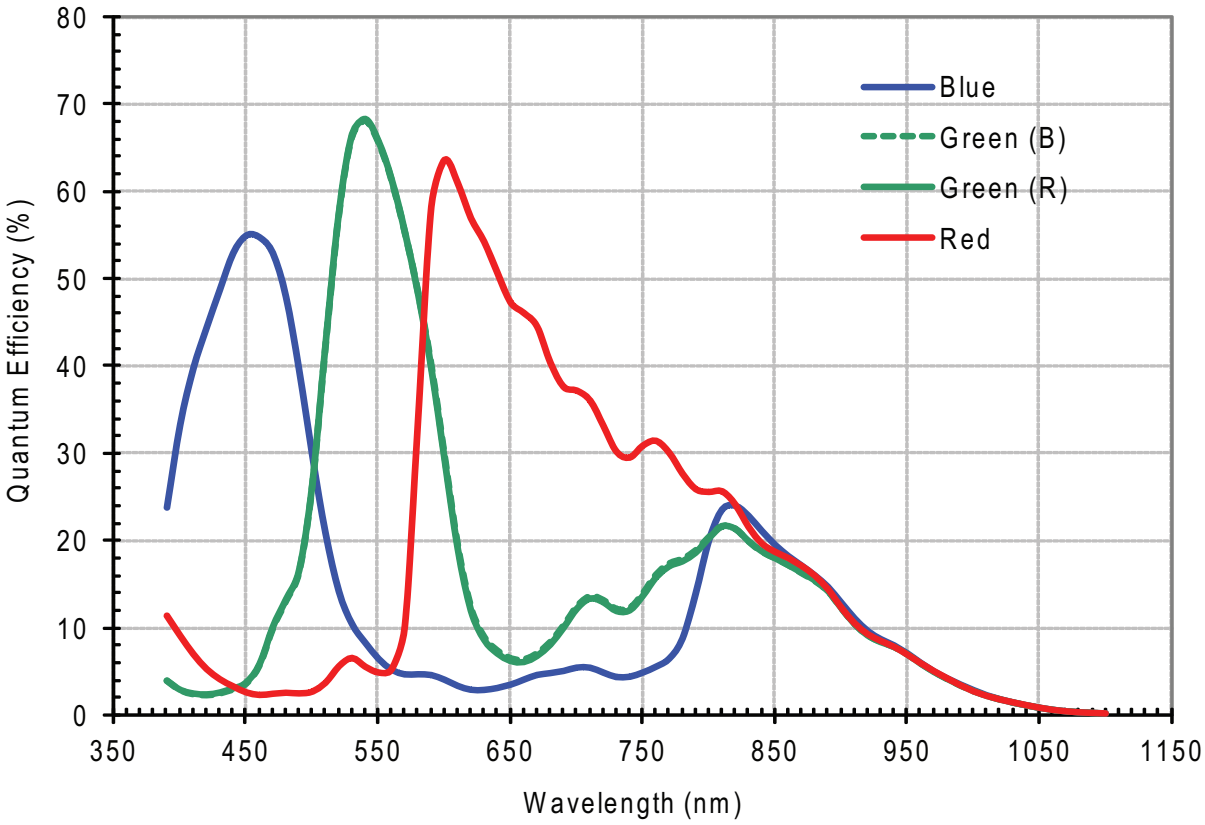

©Semiconductor Components Industries, LLC, 2015.

Electrical Specifications

Unless otherwise stated, the following specifications apply under the following conditions: VDD = 1.8V – 0.10/+0.15; VDD_IO = VDD_PLL = VAA = VAA_PIX = 2.8V ± 0.3V; VDD_SLVS = 0.4V – 0.1/+0.2; T_A = -30°C to +85°C-40°C to +105°C; output load = 10pF; frequency = 74.25 MHz; HiSPi off.

Two-Wire Serial Register Interface

The electrical characteristics of the two-wire serial register interface (SCLK, SDATA) are shown in Figure 9 and Table 5.

Figure 9: Two-Wire Serial Bus Timing Parameters

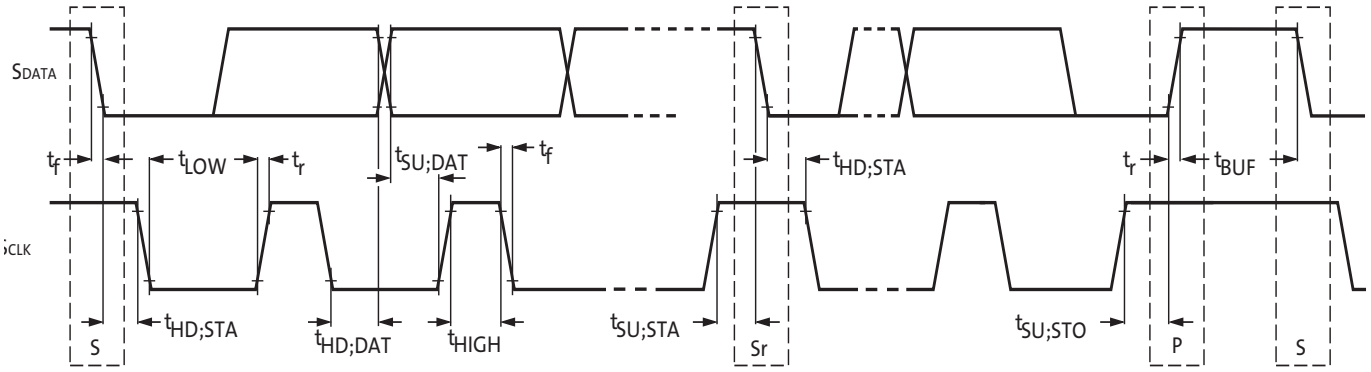

Note: Read sequence: For an 8-bit READ, read waveforms start after WRITE command and register address are issued.

Table 5: Two-Wire Serial Bus Characteristics

^{f}EXTCLK = 27 MHz; VDD = 1.8V; VDD_IO = 2.8V; VAA = 2.8V; VAA_PIX = 2.8V; VDD_PLL = 2.8V; T_A = 25°C

Parameter	Symbol	Standard Mode		Fast Mode		Unit
		Min	Max	Min	Max	
SCLK Clock Frequency	^{f}SCL	0	100	0	400	KHz
Hold time (repeated) START condition. After this period, the first clock pulse is generated	^{t}HD;STA	4.0	-	0.6	-	µs
LOW period of the SCLK clock	^{t}LOW	4.7	-	1.3	-	µs
HIGH period of the SCLK clock	^{t}HIGH	4.0	-	0.6	-	µs
Set-up time for a repeated START condition	^{t}SU;STA	4.7	-	0.6	-	µs
Data hold time	^{t}HD;DAT	0[4]	3.45[5]	0[6]	0.9[5]	µs
Data set-up time	^{t}SU;DAT	250	-	100[6]	-	ns
Rise time of both SDATA and SCLK signals	^{t}r	-	1000	20 + 0.1Cb[7]	300	ns
Fall time of both SDATA and SCLK signals	^{t}f	-	300	20 + 0.1Cb[7]	300	ns
Set-up time for STOP condition	^{t}SU;STO	4.0	-	0.6	-	µs
Bus free time between a STOP and START condition	^{t}BUF	4.7	-	1.3	-	µs
Capacitive load for each bus line	Cb	-	400	-	400	pF

©Semiconductor Components Industries, LLC, 2015.

Table 5: Two-Wire Serial Bus Characteristics (continued)

^{f}EXTCLK = 27 MHz; VDD = 1.8V; VDD_IO = 2.8V; VAA = 2.8V; VAA_PIX = 2.8V; VDD_PLL = 2.8V; T_A = 25°C

Parameter	Symbol	Standard Mode		Fast Mode		Unit
		Min	Max	Min	Max	
Serial interface input pin capacitance	CIN_SI	-	3.3	-	3.3	pF
SDATA max load capacitance	CLOAD_SD	-	30	-	30	pF
SDATA pull-up resistor	RSD	1.5	4.7	1.5	4.7	KΩ

Notes:
1. This table is based on I^{2}C standard (v2.1 January 2000). Philips Semiconductor.
2. Two-wire control is I^{2}C-compatible.
3. All values referred to V_{IHmin} = 0.9 VDD and V_{ILmax} = 0.1VDD levels. Sensor EXCLK = 27 MHz.
4. A device must internally provide a hold time of at least 300 ns for the SDATA signal to bridge the undefined region of the falling edge of SCLK.
5. The maximum ^{t}HD;DAT has only to be met if the device does not stretch the LOW period (^{t}LOW) of the SCLK signal.
6. A Fast-mode I^{2}C-bus device can be used in a Standard-mode I^{2}C-bus system, but the requirement ^{t}SU;DAT 250 ns must then be met. This will automatically be the case if the device does not stretch the LOW period of the SCLK signal. If such a device does stretch the LOW period of the SCLK signal, it must output the next data bit to the SDATA line ^{t}r max + ^{t}SU;DAT = 1000 + 250 = 1250 ns (according to the Standard-mode I^{2}C-bus specification) before the SCLK line is released.
7. Cb = total capacitance of one bus line in pF.

I/O Timing

By default, the AR023Z launches pixel data, FV, and LV with the falling edge of PIXCLK. The expectation is that the user captures DOUT[11:0], FV, and LV using the rising edge of PIXCLK.

See Figure 10 below and Table 6 on page 24 for I/O timing (AC) characteristics.

Figure 10: I/O Timing Diagram

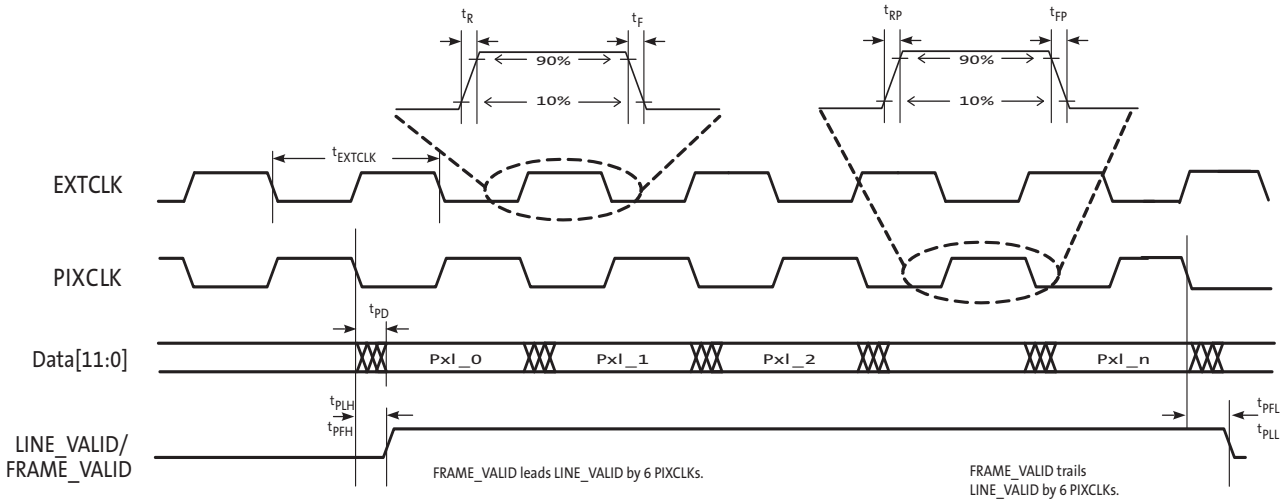

©Semiconductor Components Industries, LLC, 2015.

Table 6: I/O Timing Characteristics

Symbol	Definition	Condition	Min	Typ	Max	Unit
$f_{EXTCLK1s}$	Input clock frequency		6	–	48	MHz
$t_{EXTCLK1}$	Input clock period		20.8	–	166	ns
t_R	Input clock rise time		–	3	–	ns
t_F	Input clock fall time		–	3	–	ns
t_{RP}	Pixclk rise time		2	3.5	5	ns
t_{FP}	Pixclk fall time		2	3.5	5	ns
	Clock duty cycle		45	50	55	%
t_{CP}	EXTCLK to PIXCLK propagation delay	Nominal voltages, PLL Disabled	10	14	18	ns
f_{PIXCLK}	PIXCLK frequency	Default, Nominal Voltages	6		74.25	MHz
t_{PD}	PIXCLK to data valid	Default, Nominal Voltages	3.6	5.5	9.5	ns
t_{PFH}	PIXCLK to FV HIGH	Default, Nominal Voltages	2.9	5.3	9	ns
t_{PLH}	PIXCLK to LV HIGH	Default, Nominal Voltages	2.9	5	9	ns
t_{PFL}	PIXCLK to FV LOW	Default, Nominal Voltages	2.9	5	9	ns
t_{PLL}	PIXCLK to LV LOW	Default, Nominal Voltages	2.9	4.8	9	ns
C_{LOAD}	Output load capacitance		–	<10	–	pF
C_{IN}	Input pin capacitance		–	2.5	–	pF

Note: I/O timing characteristics are measured under the following conditions:
- Temperature is 25°C ambient
- 10 pF load
- 1.8V I/O supply voltage

©Semiconductor Components Industries, LLC, 2015.

DC Electrical Characteristics

The DC electrical characteristics are shown in the tables below.

Table 7: DC Electrical Characteristics

Symbol	Definition	Condition	Min	Typ	Max	Unit
V_{DD}	Core digital voltage		1.7	1.8	1.95	V
V_{DD_IO}	I/O digital voltage		1.7/2.5	1.8/2.8	1.9/3.1	V
V_{AA}	Analog voltage		2.5	2.8	3.1	V
V_{AA_PIX}	Pixel supply voltage		2.5	2.8	3.1	V
V_{DD_PLL}	PLL supply voltage		2.5	2.8	3.1	V
V_{DD_SLVS}	HiSPi supply voltage		0.3	0.4	0.6	V
V_{IH}	Input HIGH voltage		V_{DD_IO}*0.7	–	–	V
V_{IL}	Input LOW voltage		–	–	V_{DD_IO}*0.3	V
I_{IN}	Input leakage current	No pull-up resistor; V_{IN} = V_{DD_IO} or D_{GND}	20	–	–	µA
V_{OH}	Output HIGH voltage		V_{DD_IO}-0.3	–	–	V
V_{OL}	Output LOW voltage		–	–	0.4	V
I_{OH}	Output HIGH current	At specified V_{OH}	-22	–	–	mA
I_{OL}	Output LOW current	At specified V_{OL}	–	–	22	mA

Caution **Stresses greater than those listed in Table 8 may cause permanent damage to the device. This is a stress rating only, and functional operation of the device at these or any other conditions above those indicated in the operational sections of this specification is not implied.**

Table 8: Absolute Maximum Ratings

Symbol	Definition	Condition	Min	Max	Unit
V_{DD_MAX}	Core digital voltage		–0.3	2.4	V
$V_{DD_IO_MAX}$	I/O digital voltage		–0.3	4	V
V_{AA_MAX}	Analog voltage		–0.3	4	V
V_{AA_PIX}	Pixel supply voltage		–0.3	4	V
V_{DD_PLL}	PLL supply voltage		–0.3	4	V
VDD_SLVS_MAX	HiSPi I/O digital voltage		–0.3	2.4	V
t_{ST}	Storage temperature		–40	85	°C

Note: Exposure to absolute maximum rating conditions for extended periods may affect reliability.

©Semiconductor Components Industries, LLC, 2015.

Table 9: 1080p30 HDR (ALTM) 74MHz Parallel 2.8V

Definition	Condition	Symbol	Voltage	Min	Typ	Max
Digital operating current	Streaming 1080p30	I_{DD}	1.8	90	175	220
I/O digital operating current	Streaming 1080p30	I_{DD_IO}	2.8	10	30	50
Analog operating current	Streaming 1080p30	I_{AA}	2.8	35	45	85
Pixel supply current	Streaming 1080p30	I_{AA_PIX}	2.8	2	4	7
PLL supply current	Streaming 1080p30	I_{DD_PLL}	2.8	5.5	6.2	7
			Power (mW)	309	557.76	813.2

Note: Operating currents are measured in mA at the following conditions:
- V_{AA} = V_{AA_PIX} = V_{DD_PLL} = V_{DD_IO} =2.8 V
- V_{DD}= 1.8 V
- PLL Enabled and PIXCLK = 74.25 MHz
- Low power mode enabled
- T_A = 25°C

Table 10: 1080p30 Linear 74MHz Parallel 2.8V

Definition	Condition	Symbol	Voltage	Min	Typ	Max
Digital operating current	Streaming 1080p30	I_{DD}	1.8	75	107	145
I/O digital operating current	Streaming 1080p30	I_{DD_IO}	2.8	10	30	50
Analog operating current	Streaming 1080p30	I_{AA}	2.8	20	30	50
Pixel supply current	Streaming 1080p30	I_{AA_PIX}	2.8	1	3	7
PLL supply current	Streaming 1080p30	I_{DD_PLL}	2.8	5.5	6.2	7
			Power (mW)	237.2	386.36	580.2

Note: Operating currents are measured in mA at the following conditions:
- V_{AA} = V_{AA_PIX} = V_{DD_PLL} = V_{DD_IO} =2.8 V
- V_{DD}= 1.8 V
- PLL Enabled and PIXCLK = 74.25 MHz
- Low power mode enabled
- T_A = 25°C

Table 11: 1080p30 HDR (ALTM) 74MHz Parallel 1.8V

Definition	Condition	Symbol	Voltage	Min	Typ	Max
Digital operating current	Streaming 1080p30	I_{DD}	1.8	90	175	220
I/O digital operating current	Streaming 1080p30	I_{DD_IO}	1.8	10	20	30
Analog operating current	Streaming 1080p30	I_{AA}	2.8	35	45	85
Pixel supply current	Streaming 1080p30	I_{AA_PIX}	2.8	2	4	7
PLL supply current	Streaming 1080p30	I_{DD_PLL}	2.8	5.5	6.2	7
			Power (mW)	299	509.76	727.2

Note: Operating currents are measured in mA at the following conditions:
- V_{AA} = V_{AA_PIX} = V_{DD_PLL} =2.8 V
- V_{DD} = V_{DD_IO}= 1.8 V
- PLL Enabled and PIXCLK = 74.25 MHz
- Low power mode enabled
- T_A = 25°C

©Semiconductor Components Industries, LLC, 2015.

Table 12: 1080p30 Linear 74 MHz Parallel 1.8V

Definition	Condition	Symbol	Voltage	Min	Typ	Max
Digital operating current	Streaming 1080p30	I_{DD}	1.8	75	107	145
I/O digital operating current	Streaming 1080p30	I_{DD_IO}	1.8	10	20	30
Analog operating current	Streaming 1080p30	I_{AA}	2.8	20	30	50
Pixel supply current	Streaming 1080p30	I_{AA_PIX}	2.8	1	3	7
PLL supply current	Streaming 1080p30	I_{DD_PLL}	2.8	5.5	6.2	7
			Power (mW)	227.2	338.36	494.2

Note: Operating currents are measured in mA at the following conditions:
- V_{AA} = V_{AA_PIX} = V_{DD_PLL} =2.8 V
- V_{DD} = V_{DD_IO}= 1.8 V
- PLL Enabled and PIXCLK = 74.25 MHz
- Low power mode enabled
- T_A = 25°C

Table 13: 1080p30 HDR (ALTM) 74 MHz HiSPi SLVS (Low Power Mode)

Definition	Condition	Symbol	Voltage	Min	Typ	Max
Digital Operating Current	Streaming 1080p30	I_{DD}	1.8	145	175	235
Analog Operating Current	Streaming 1080p30	I_{DD_IO}	2.8	25	46	65
Pixel Supply Current	Streaming 1080p30	I_{AA}	2.8	1	4	7
PLL Supply Current	Streaming 1080p30	I_{AA_PIX}	2.8	6	7.4	8.5
SLVS Supply Current	Streaming 1080p30	I_{DD_PLL}	0.4	3	9	14
			Power (mW)	351.8	479.32	654

Note: Operating currents are measured in mA at the following conditions:
- V_{AA} = V_{AA_PIX} = V_{DD_PLL} =2.8 V
- V_{DD} = V_{DD_IO}= 1.8 V
- V_{DD_SLVS}= 0.4V
- PLL Enabled and PIXCLK = 37.125 MHz
- 4-lane HiSPi mode
- Low power mode enabled
- T_A = 25°C

©Semiconductor Components Industries, LLC, 2015.

Table 14: 1080p30 Linear 74 MHz HiSPi SLVS

Definition	Condition	Symbol	Voltage	Min	Typ	Max
Digital Operating Current	Streaming 1080p30	I_{DD}	1.8	75	115	155
Analog Operating Current	Streaming 1080p30	I_{DD_IO}	2.8	20	30	50
Pixel Supply Current	Streaming 1080p30	I_{AA}	2.8	1	3	7
PLL Supply Current	Streaming 1080p30	I_{AA_PIX}	2.8	6	7.4	8.5
SLVS Supply Current	Streaming 1080p30	I_{DD_PLL}	0.4	3	9	14
			Power (mW)	211.8	323.72	468

Note: Operating currents are measured in mA at the following conditions:
- V_{AA} = V_{AA_PIX} = V_{DD_PLL} =2.8 V
- V_{DD} = V_{DD_IO}= 1.8 V
- V_{DD_SLVS}= 0.4V
- PLL Enabled and PIXCLK = 74.25 MHz
- 4-lane HiSPi mode
- Low power mode enabled
- T_A = 25°C

Table 15: 1080p30 HDR (ALTM) 74 MHz HiSPi HiVcm (Low Power Mode)

Definition	Condition	Symbol	Voltage	Min	Typ	Max
Digital Operating Current	Streaming 1080p30	I_{DD}	1.8	145	175	235
Analog Operating Current	Streaming 1080p30	I_{DD_IO}	2.8	25	46	65
Pixel Supply Current	Streaming 1080p30	I_{AA}	2.8	1	4	7
PLL Supply Current	Streaming 1080p30	I_{AA_PIX}	2.8	6	7.4	8.5
SLVS Supply Current	Streaming 1080p30	I_{DD_PLL}	1.8	10	20	30
			Power (mW)	368.6	511.72	702.4

Note: Operating currents are measured in mA at the following conditions:
- V_{AA} = V_{AA_PIX} = V_{DD_PLL} =2.8 V
- V_{DD} = V_{DD_IO} = V_{DD_SLVS} = 1.8 V
- PLL Enabled and PIXCLK = 37.125 MHz
- 4-lane HiSPi mode
- Low power mode enabled
- T_A = 25°C

©Semiconductor Components Industries, LLC, 2015.

Table 16: 1080p30 Linear 74 MHz HiSPi HiVcm

Definition	Condition	Symbol	Voltage	Min	Typ	Max
Digital Operating Current	Streaming 1080p30	I_{DD}	1.8	75	115	155
Analog Operating Current	Streaming 1080p30	I_{DD_IO}	2.8	20	30	50
Pixel Supply Current	Streaming 1080p30	I_{AA}	2.8	1	3	7
PLL Supply Current	Streaming 1080p30	I_{AA_PIX}	2.8	6	7.4	8.5
SLVS Supply Current	Streaming 1080p30	I_{DD_PLL}	1.8	10	20	30
			Power (mW)	228.6	356.12	516.4

Note: Operating currents are measured in mA at the following conditions:
- V_{AA} = V_{AA_PIX} = V_{DD_PLL} =2.8 V
- V_{DD} = V_{DD_IO} = V_{DD_SLVS}= 1.8 V
- PLL Enabled and PIXCLK = 74.25 MHz
- 4-lane HiSPi mode
- Low power mode enabled
- T_A = 25°C

Table 17: Line Interleaved HiSPi SLVS

Definition	Condition	Symbol	Voltage	Min	Typ	Max
Digital Operating Current	Streaming 1080p30	I_{DD}	1.8	185	230	265
Analog Operating Current	Streaming 1080p30	I_{DD_IO}	2.8	20	36	55
Pixel Supply Current	Streaming 1080p30	I_{AA}	2.8	1	3.3	7
PLL Supply Current	Streaming 1080p30	I_{AA_PIX}	2.8	7	8.2	9.5
SLVS Supply Current	Streaming 1080p30	I_{DD_PLL}	0.4	3	9	14
			Power (mW)	412.6	550.6	668.8

Note: Operating currents are measured in mA at the following conditions:
- V_{AA} = V_{AA_PIX} = V_{DD_PLL} =2.8 V
- V_{DD} = V_{DD_IO}= 1.8 V
- V_{DD_SLVS}= 0.4V
- PLL Enabled and PIXCLK = 74.25 MHz
- 4-lane HiSPi mode
- T_A= 25°C

©Semiconductor Components Industries, LLC, 2015.

Table 18: Line Interleaved HiSPi HiVcm

Definition	Condition	Symbol	Voltage	Min	Typ	Max
Digital Operating Current	Streaming 1080p30	I_{DD}	1.8	185	230	265
Analog Operating Current	Streaming 1080p30	I_{DD_IO}	2.8	20	36	55
Pixel Supply Current	Streaming 1080p30	I_{AA}	2.8	1	3.3	7
PLL Supply Current	Streaming 1080p30	I_{AA_PIX}	2.8	7	8.2	9.5
SLVS Supply Current	Streaming 1080p30	I_{DD_PLL}	1.8	10	20	30
			Power (mW)	429.4	583	717.2

Note: Operating currents are measured in mA at the following conditions:
- V_{AA} = V_{AA_PIX} = V_{DD_PLL} = 2.8 V
- V_{DD}= V_{DD_IO} = 1.8 V
- V_{DD_SLVS} = 1.8 V
- PLL Enabled and PIXCLK = 74.25 MHz
- 4-lane HiSPi mode
- T_A = 25°C

HiSPi Electrical Specifications

The ON Semiconductor AR023Z sensor supports both SLVS and HiVCM HiSPi modes. Refer to the High-Speed Serial Pixel (HiSPi) Interface Physical Layer Specification v2.00.00 for electrical definitions, specifications, and timing information. The V_{DD_SLVS} supply in this datasheet corresponds to V_{DD_TX} in the HiSPi Physical Layer Specification. Similarly, V_{DD} is equivalent to V_{DD_HiSPi} as referenced in the specification. The DLL as implemented on AR023Z is limited in the number of available delay steps and differs from the HiSPi specification as described in this section.

Table 19: Channel Skew
Measurement Conditions: V_{DD_HiSPi} = 1.8V;$V_{DD_HiSPi_TX}$ = 0.4V; Data Rate =480 Mbps; DLL set to 0

Data Lane Skew in Reference to Clock	tCHSKEW1PHY	-150	ps

©Semiconductor Components Industries, LLC, 2015.

Power-On Reset and Standby Timing

Power-Up Sequence

The recommended power-up sequence for the AR023Z is shown in Figure 11. The available power supplies (VDD_IO, VDD, VDD_SLVS, VDD_PLL, VAA, VAA_PIX) must have the separation specified below.

1. Turn on VDD_PLL power supply.
2. After 100µs, turn on VAA and VAA_PIX power supply.
3. After 100µs, turn on VDD_IO power supply.
4. After 100µs, turn on VDD power supply.
5. After 100µs, turn on VDD_SLVS power supply.
6. After the last power supply is stable, enable EXTCLK.
7. Assert RESET_BAR for at least 1ms. The parallel interface will be tri-stated during this time.
8. Wait 150000 EXTCLKs (for internal initialization into software standby.
9. Configure PLL, output, and image settings to desired values.
10. Wait 1ms for the PLL to lock.
11. Set streaming mode (R0x301a[2] = 1).

Figure 11: Power Up

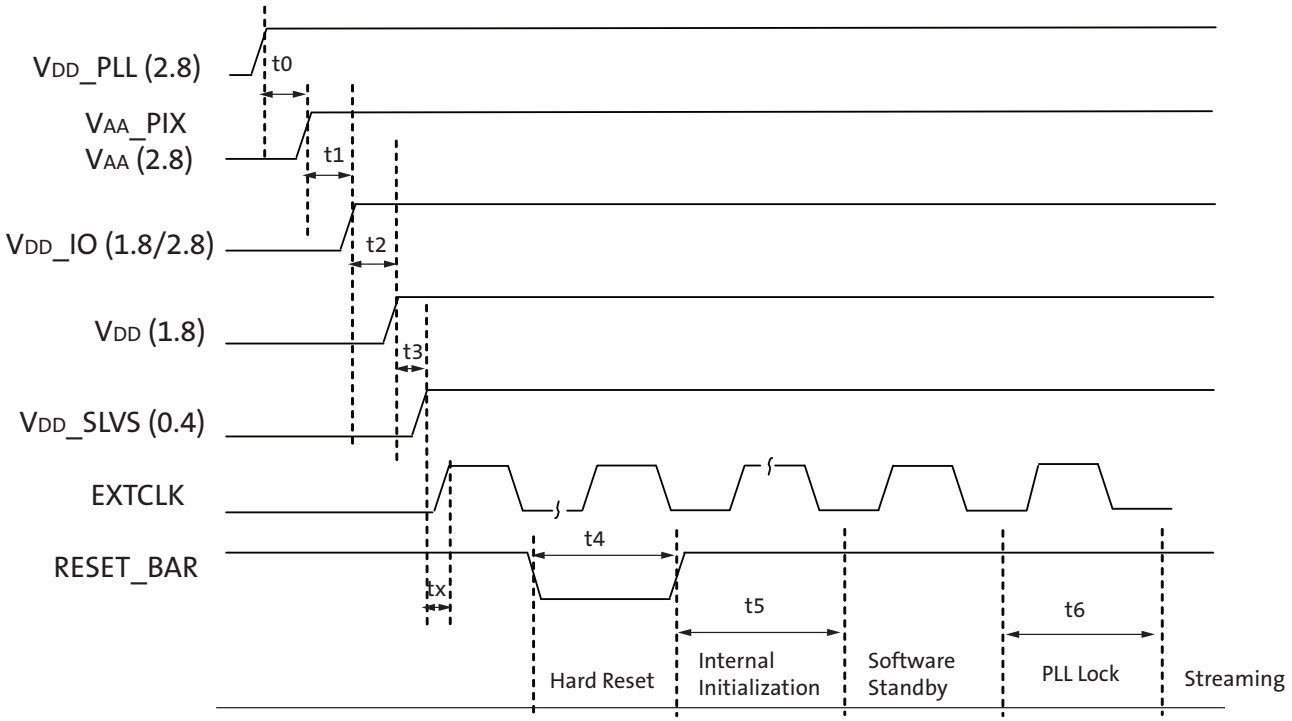

©Semiconductor Components Industries, LLC, 2015.

Table 20: Power-Up Sequence

Definition	Symbol	Minimum	Typical	Maximum	Unit
V_{DD}_PLL to V_{AA}/V_{AA}_PIX[3]	t0	0	100	–	µs
V_{AA}/V_{AA}_PIX to V_{DD}_IO	t1	0	100	–	µs
V_{DD}_IO to V_{DD}	t2	0	100	–	µs
V_{DD} to V_{DD}_SLVS	t3	0	100	–	µs
Xtal settle time	tx	–	30[1]	–	ms
Hard Reset	t4	1[2]	–	–	ms
Internal Initialization	t5	150000	–	–	EXTCLKs
PLL Lock Time	t6	1	–	–	ms

Notes:
1. Xtal settling time is component-dependent, usually taking about 10 – 100 ms.
2. Hard reset time is the minimum time required after power rails are settled. In a circuit where Hard reset is held down by RC circuit, then the RC time must include the all power rail settle time and Xtal settle time.
3. It is critical that V_{DD}_PLL is not powered up after the other power supplies. It must be powered before or at least at the same time as the others. If the case happens that V_{DD}_PLL is powered after other supplies then sensor may have functionality issues and will experience high current draw on this supply.

©Semiconductor Components Industries, LLC, 2015.

Power-Down Sequence

The recommended power-down sequence for the AR023Z is shown in Figure 12. The available power supplies (VDD_IO, VDD, VDD_SLVS, VDD_PLL, VAA, VAA_PIX) must have the separation specified below.

1. Disable streaming if output is active by setting standby R0x301a[2] = 0
2. The soft standby state is reached after the current row or frame, depending on configuration, has ended.
3. Turn off VDD_SLVS.
4. Turn off VDD.
5. Turn off VDD_IO.
6. Turn off VAA/VAA_PIX.
7. Turn off VDD_PLL.

Figure 12: Power Down

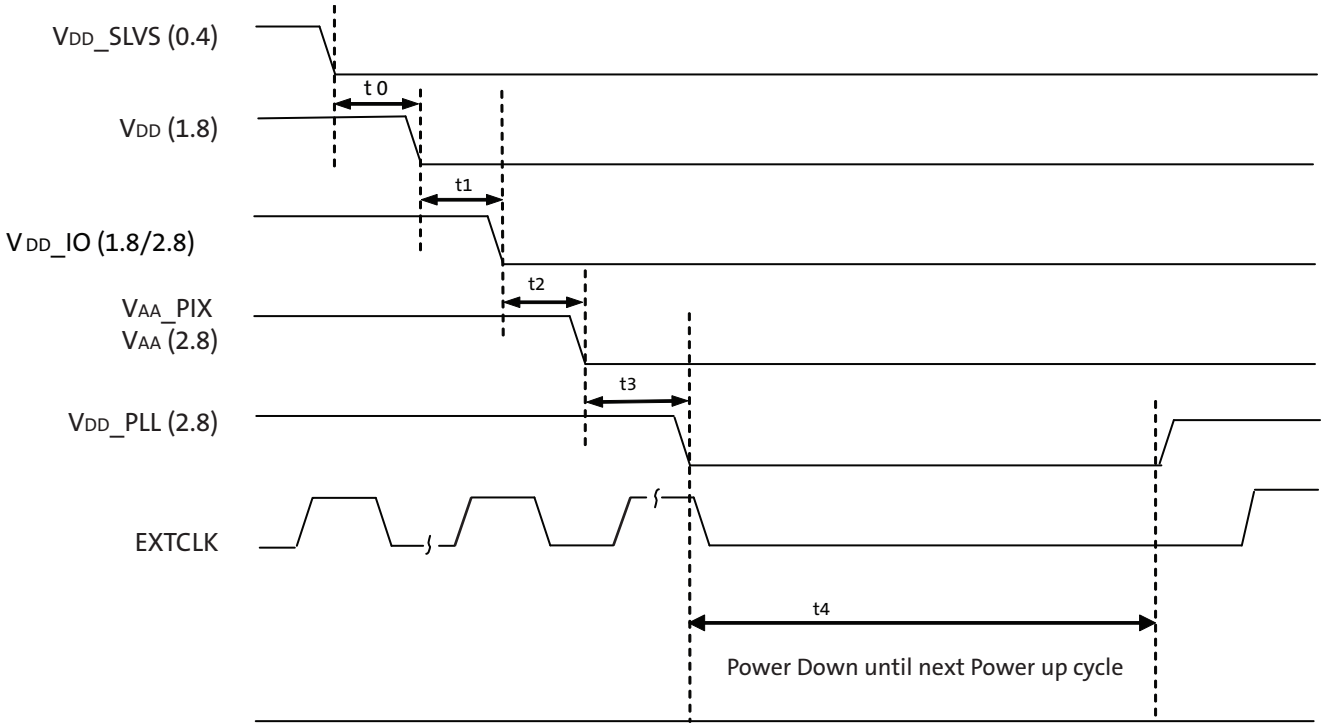

Table 21: Power-Down Sequence

Definition	Symbol	Minimum	Typical	Maximum	Unit
VDD_SLVS to VDD	t0	0	–	–	µs
VDD to VDD_IO	t1	0	–	–	µs
VDD_IO to VAA/VAA_PIX	t2	0	–	–	µs
VAA/VAA_PIX to VDD_PLL	t3	0	–	–	µs
Power Down until Next Power Up Time	t4	100	–	–	ms

t4 is required between power down and next power up time; all decoupling caps from regulators must be completely discharged.

©Semiconductor Components Industries, LLC, 2015.

Package Diagrams

Figure 13: 80iBGA 10 x 10 Package Diagram

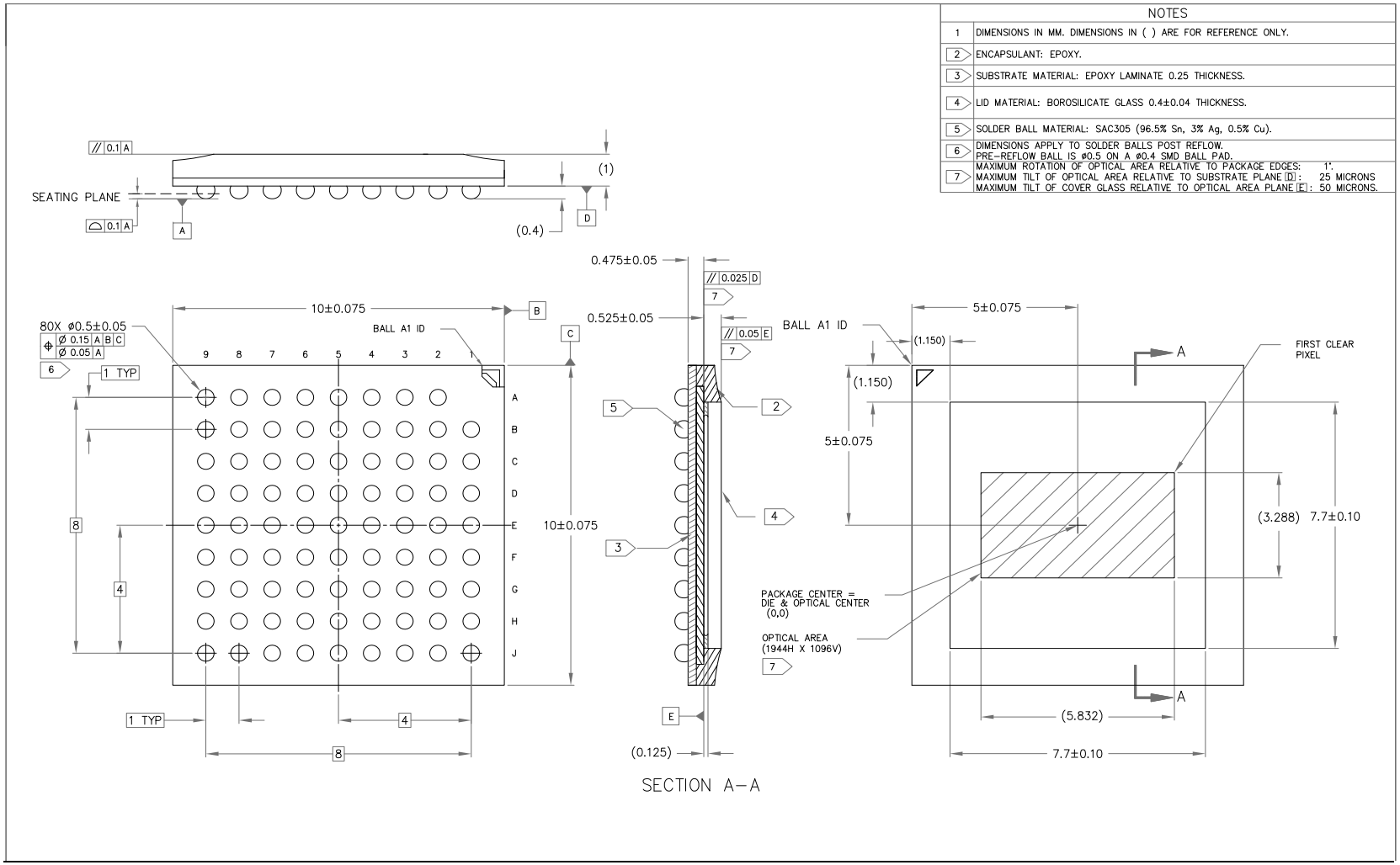

©Semiconductor Components Industries, LLC, 2015

Revision History

Rev. 0 . . . . . 10/15

- Initial release

DR-Pix is a trademark of Semiconductor Components Industries, LLC (SCILLC) or its subsidiaries in the United States and/or other countries.

ON Semiconductor and the ON logo are registered trademarks of Semiconductor Components Industries, LLC (SCILLC) or its subsidiaries in the United States and/or other countries. SCILLC owns the rights to a number of patents, trademarks, copyrights, trade secrets, and other intellectual property. A listing of SCILLC's product/patent coverage may be accessed at www.onsemi.com/site/pdf/Patent-Marking.pdf. SCILLC reserves the right to make changes without further notice to any products herein. SCILLC makes no warranty, representation or guarantee regarding the suitability of its products for any particular purpose, nor does SCILLC assume any liability arising out of the application or use of any product or circuit, and specifically disclaims any and all liability, including without limitation special, consequential or incidental damages. "Typical" parameters which may be provided in SCILLC data sheets and/or specifications can and do vary in different applications and actual performance may vary over time. All operating parameters, including "Typicals" must be validated for each customer application by customer's technical experts. SCILLC does not convey any license under its patent rights nor the rights of others. SCILLC products are not designed, intended, or authorized for use as components in systems intended for surgical implant into the body, or other applications intended to support or sustain life, or for any other application in which the failure of the SCILLC product could create a situation where personal injury or death may occur. Should Buyer purchase or use SCILLC products for any such unintended or unauthorized application, Buyer shall indemnify and hold SCILLC and its officers, employees, subsidiaries, affiliates, and distributors harmless against all claims, costs, damages, and expenses, and reasonable attorney fees arising out of, directly or indirectly, any claim of personal injury or death associated with such unintended or unauthorized use, even if such claim alleges that SCILLC was negligent regarding the design or manufacture of the part. SCILLC is an Equal Opportunity/Affirmative Action Employer. This literature is subject to all applicable copyright laws and is not for resale in any manner.

©Semiconductor Components Industries, LLC, 2015 .